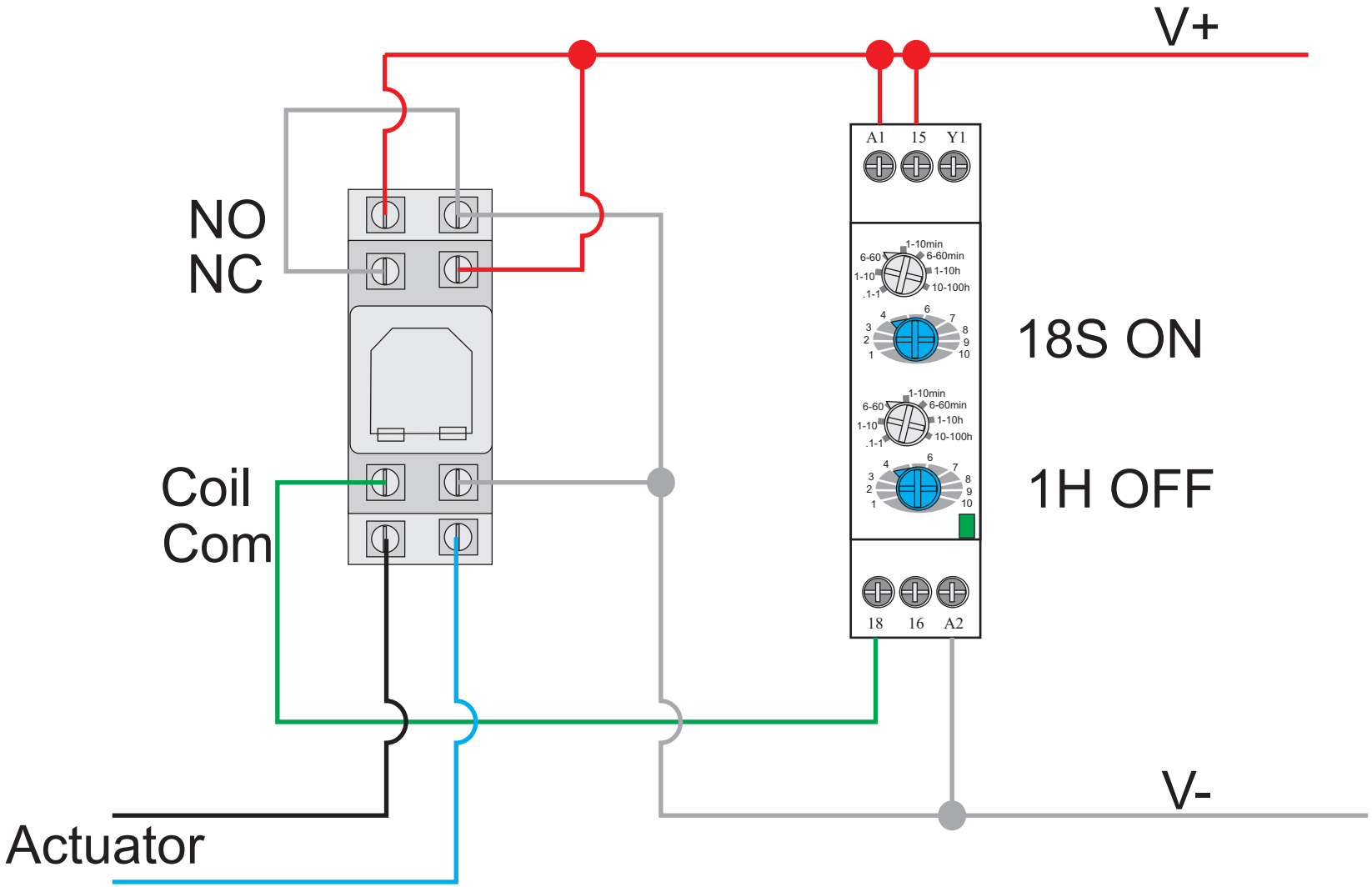
V+
NO
NC
Coil
Com
Actuator
A1
15
Y1
18
16
A2
18S ON
1H OFF
V-